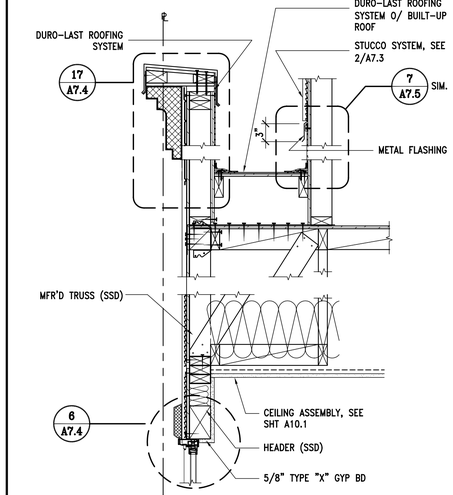

17 DETAIL
1"=1'-0"

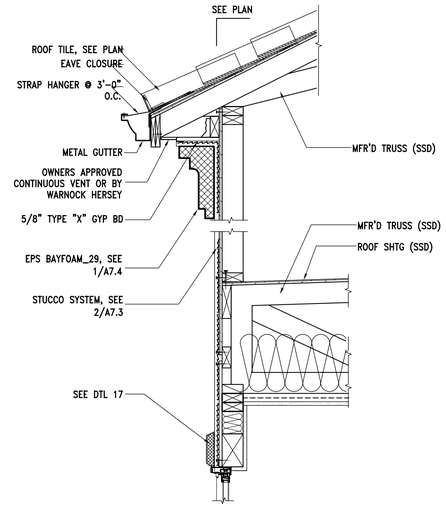

13 DETAIL
1"=1'-0"

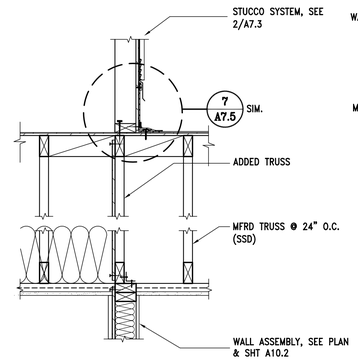

9 DETAIL
1"=1'-0"

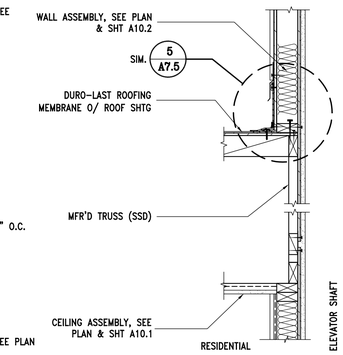

5 DETAIL
1"=1'-0"

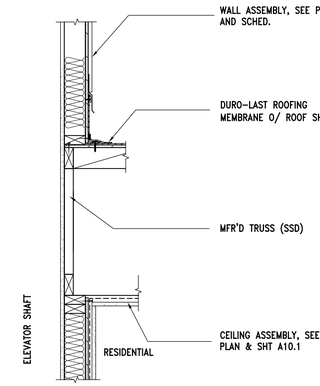

1 DETAIL
1"=1'-0" NOTE: SEE SHT S5.2 FOR STRUCTURAL FRAMINGS, TYP.

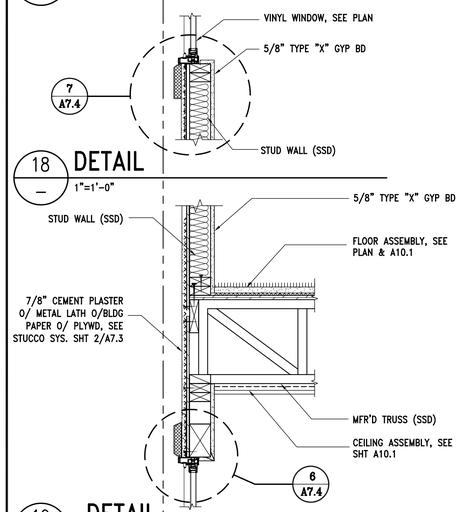

18 DETAIL
1"=1'-0"

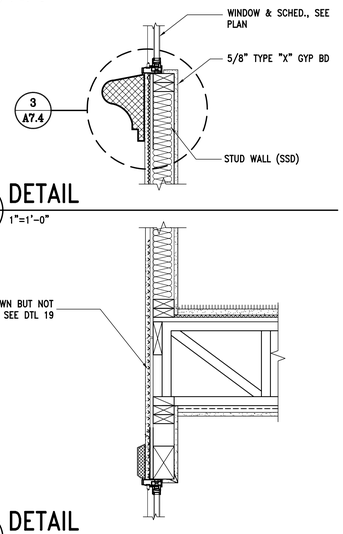

14 DETAIL
1"=1'-0"

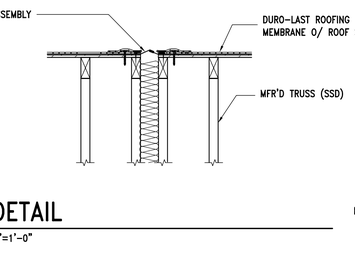

10 DETAIL
1"=1'-0"

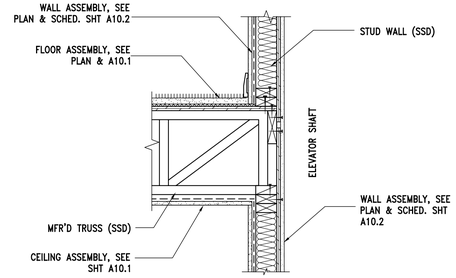

7 DETAIL
1"=1'-0"

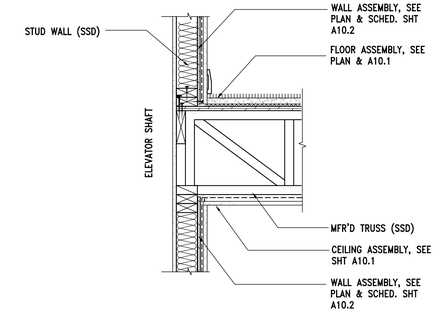

3 DETAIL
1"=1'-0"

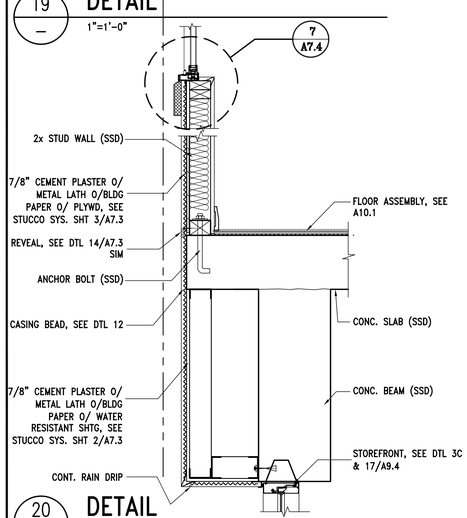

20 DETAIL
1"=1'-0"

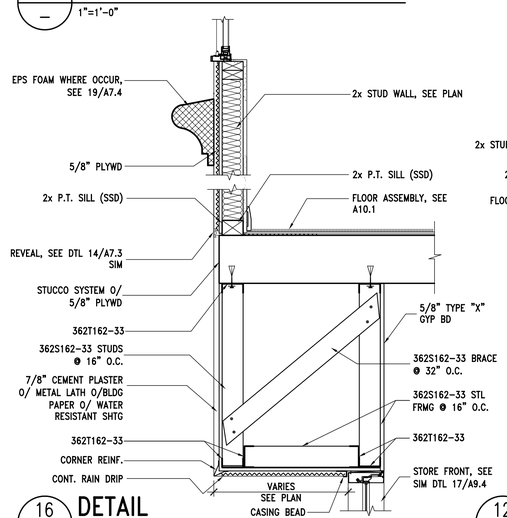

16 DETAIL
1"=1'-0"

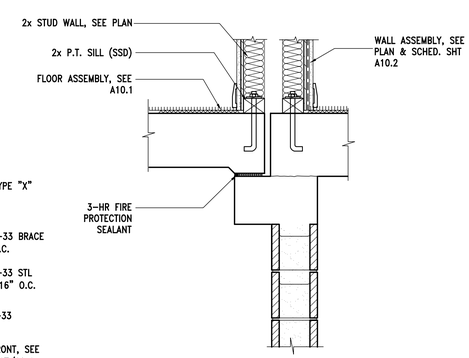

12 DETAIL
1"=1'-0"

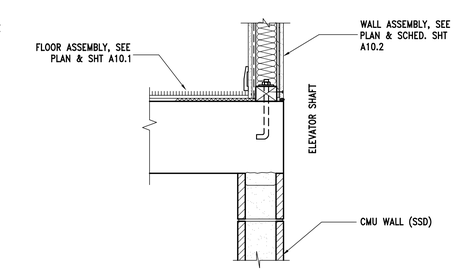

8 DETAIL
1"=1'-0"

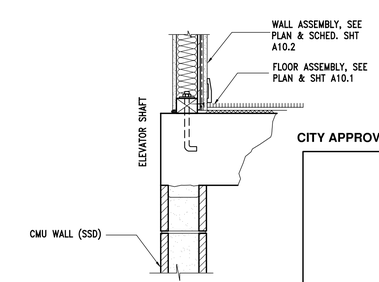

4 DETAIL
1"=1'-0"

CITY APPROVAL STAMP

THEOPHANOUS
STRUCTURAL ENGINEERS
BUILDING CODE REVIEW AND ALTERNATE STRUCTURES ANALYSIS * DESIGN * PLAN CHECKING
75 Silverwood Drive, Lafayette, CA 94549
Tel: (925) 284-2822 Fax: (925) 284-9745
E-mail: ntheophanous@ntheo.com

THE PLANS, DRAWINGS AND SPECIFICATIONS, INCLUDING ELECTRONIC FORMS, PROPOSED BY THEOPHANOUS STRUCTURAL ENGINEERS, ARE THE PROPERTY OF THE ENGINEER AND SHALL BE RETURNED ON REQUEST. THEY SHALL NOT BE USED FOR ANY OTHER WORK, EXCEPT BY AGREEMENT WITH THE ENGINEER.

REGISTERED PROFESSIONAL ENGINEER — Nicholas C. Theophanous — No. S002067 — Exp. 09-30-09 — STRUCTURAL — STATE OF CALIFORNIA
ENGINEER'S STAMP

CLIENT: THEOPHANOUS FAMILY
75 SILVERWOOD DR LAFAYETTE, CA 94549
TEL:(925)284-2822 Fax:(925)284-9745

PROJECT TITLE: FRUITVALE COMMONS
1242 35th Ave Oakland, CA 94601

SHEET TITLE: DETAILS

REVISIONS

JOB NUMBER	J2002.060
DRAWN BY: TD	CHECKED BY: NCT
SCALE (U.O.N.)	AS SHOWN
DATE	06/22/07
SHEET NUMBER	A5.2
	20 OF _ SHEETS