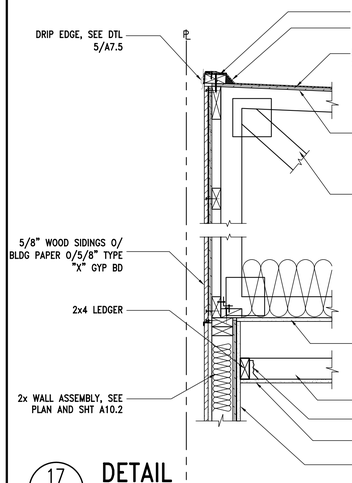

17 DETAIL
1"=1'-0"

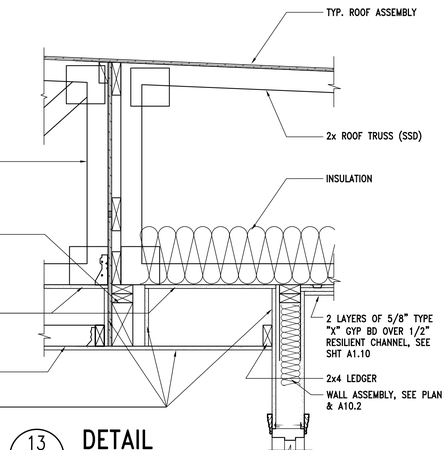

13 DETAIL
1"=1'-0"

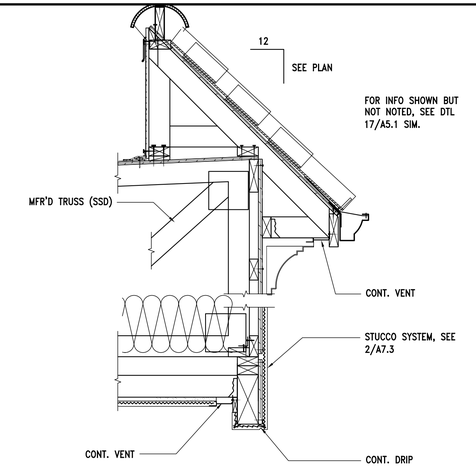

5 DETAIL
1"=1'-0"

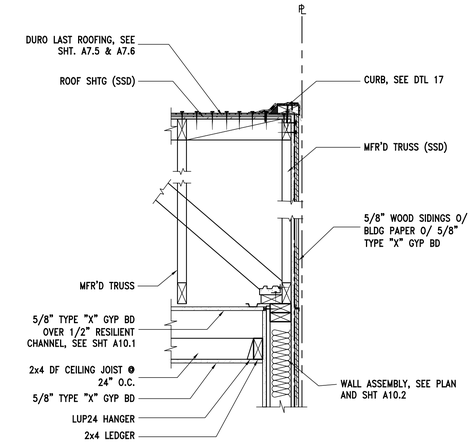

1 DETAIL
1"=1'-0"
NOTE: SEE SHT S5.4 FOR STRUCTURAL FRAMINGS, TYP.

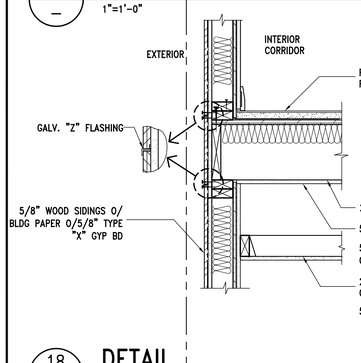

18 DETAIL
1"=1'-0"

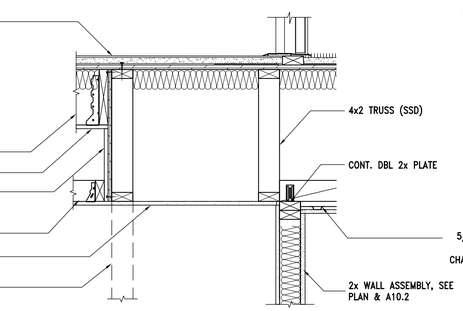

14 DETAIL
1"=1'-0"

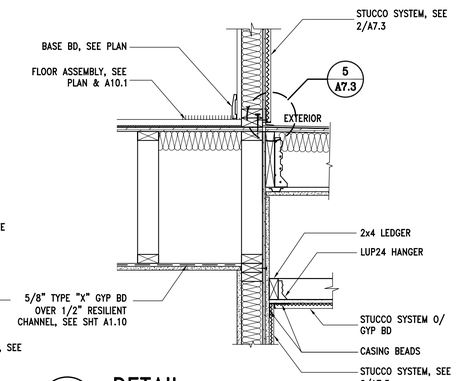

10 DETAIL
1"=1'-0"

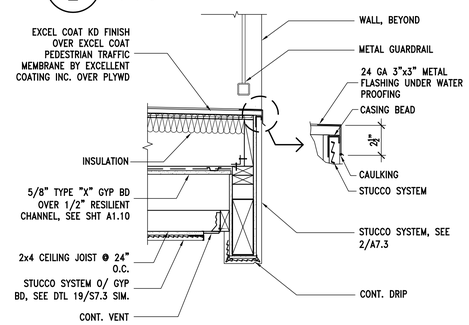

6 DETAIL
1"=1'-0"

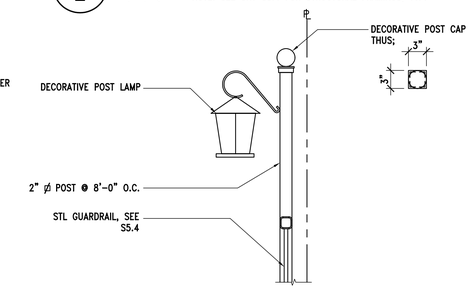

2 DETAIL
1"=1'-0"

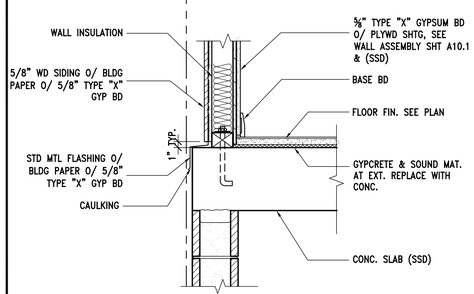

19 DETAIL
1"=1'-0"

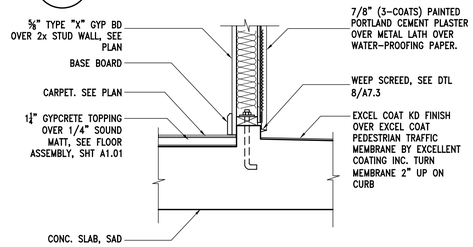

11 DETAIL
1"=1'-0"

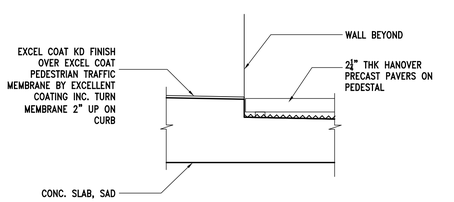

7 DETAIL
1"=1'-0"

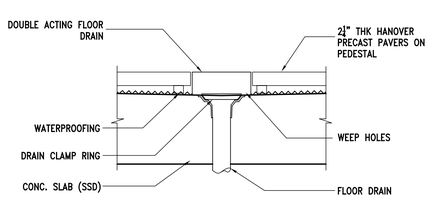

16 DETAIL
1"=1'-0"

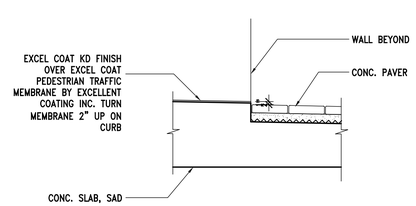

12 DETAIL
1"=1'-0"
OWNER'S OPTION

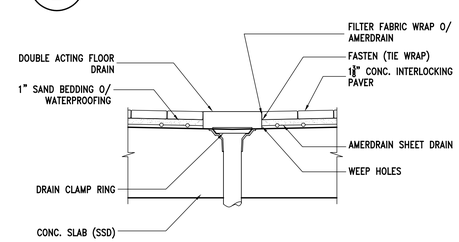

8 DETAIL
1"=1'-0"
OWNER'S OPTION

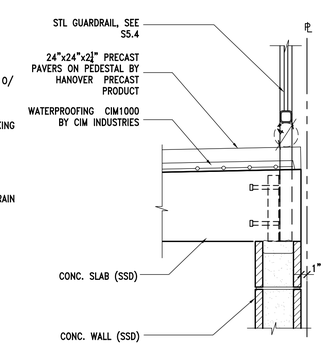

CITY APPROVAL STAMP

THEOPHANOUS
STRUCTURAL ENGINEERS
BUILDINGS, BRIDGES AND OTHER STRUCTURES
ANALYSIS * DESIGN * PLAN CHECKING
75 Silverwood Drive, Lafayette, CA 94549
Tel: (925) 284-2822 Fax: (925) 284-9745
E-mail: ntheophanous@ntheo.com

THE INFORMATION, DESIGNS AND SPECIFICATIONS CONTAINED HEREIN ARE THE PROPERTY OF THE ENGINEER AND SHALL NOT BE REPRODUCED OR ADAPTED WITHOUT THE ENGINEER'S WRITTEN CONSENT. ALL REPORTS, DRAWINGS AND SPECIFICATIONS PREPARED BY THE ENGINEER ARE INSTRUMENTS OF SERVICE FOR USE SOLELY WITH RESPECT TO THIS PROJECT. THEY ARE NOT TO BE USED BY OTHERS ON OTHER PROJECTS, OR ON EXTENSIONS TO THIS PROJECT, EXCEPT BY AGREEMENT IN WRITING AND WITH APPROPRIATE COMPENSATION TO THE ENGINEER.

REGISTERED PROFESSIONAL ENGINEER
Nicholas C. Theophanous
No. S002067
Exp. 09-30-09
STRUCTURAL
STATE OF CALIFORNIA
ENGINEER'S STAMP

CLIENT:

THEOPHANOUS FAMILY
75 SILVERWOOD DR LAFAYETTE, CA 94549
TEL:(925)284-2822 Fax:(925)284-9745

PROJECT TITLE:
FRUITVALE COMMONS
1242 35th Ave Oakland, CA 94601

SHEET TITLE:
DETAILS

REVISIONS

JOB NUMBER: J2002.060
DRAWN BY: TD
CHECKED BY: NCT
SCALE (U.O.N.): AS SHOWN
DATE: 06/22/07
SHEET NUMBER: A5.4
20 OF _ SHEETS