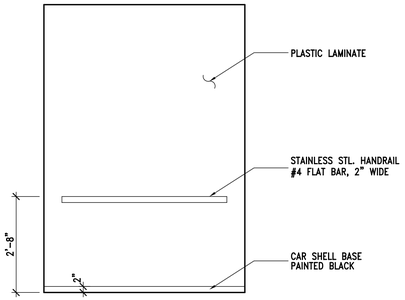


17 — ELEVATION
1/2"=1'-0"

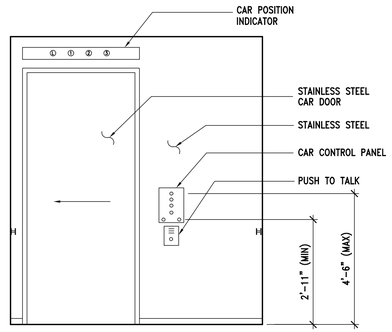


13 — ELEVATION
1/2"=1'-0"

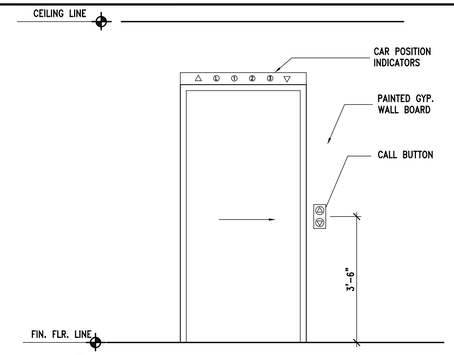


9 — ELEVATION
1/2"=1'-0"

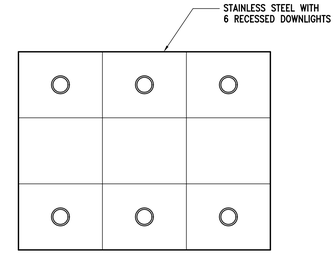


5 — REFLECTED CLG
1/2"=1'-0"

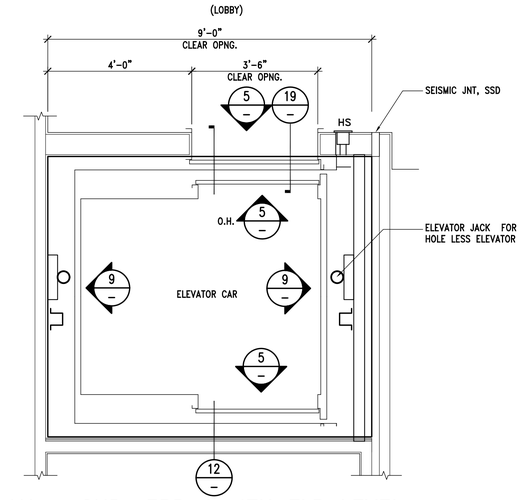


2 — PLAN – 2ND, 3RD & 4TH FLR LEVEL
1/2"=1'-0"

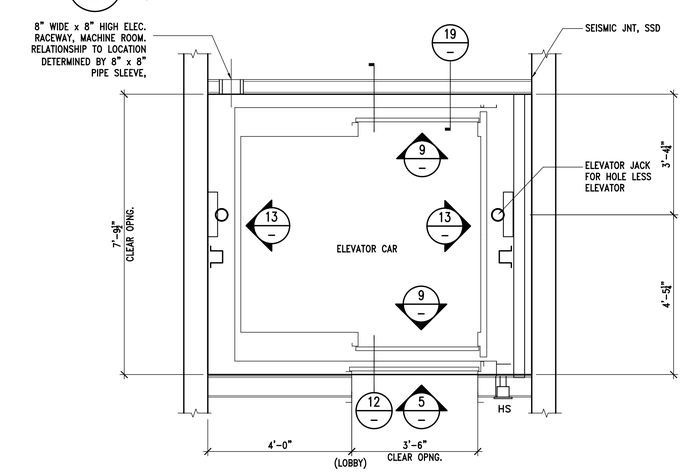


3 — PLAN – 1ST FLR LEVEL
1/2"=1'-0"

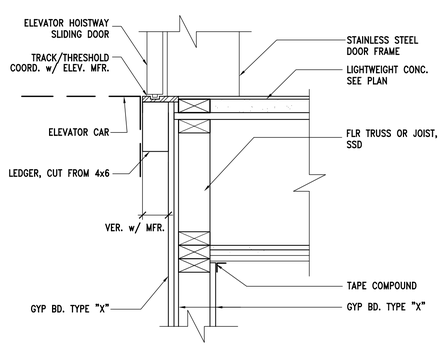


19 — DETAIL
1"=1'-0"

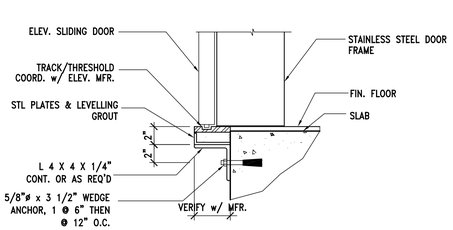


NOTE:
THE CLEARANCE BETWEEN THE CAR PLATFORM SILL & THE EDGE OF HOISTWAY LANDING SHALL BE NO GREATER THAN 1¼".

20 — DETAIL
1"=1'-0"

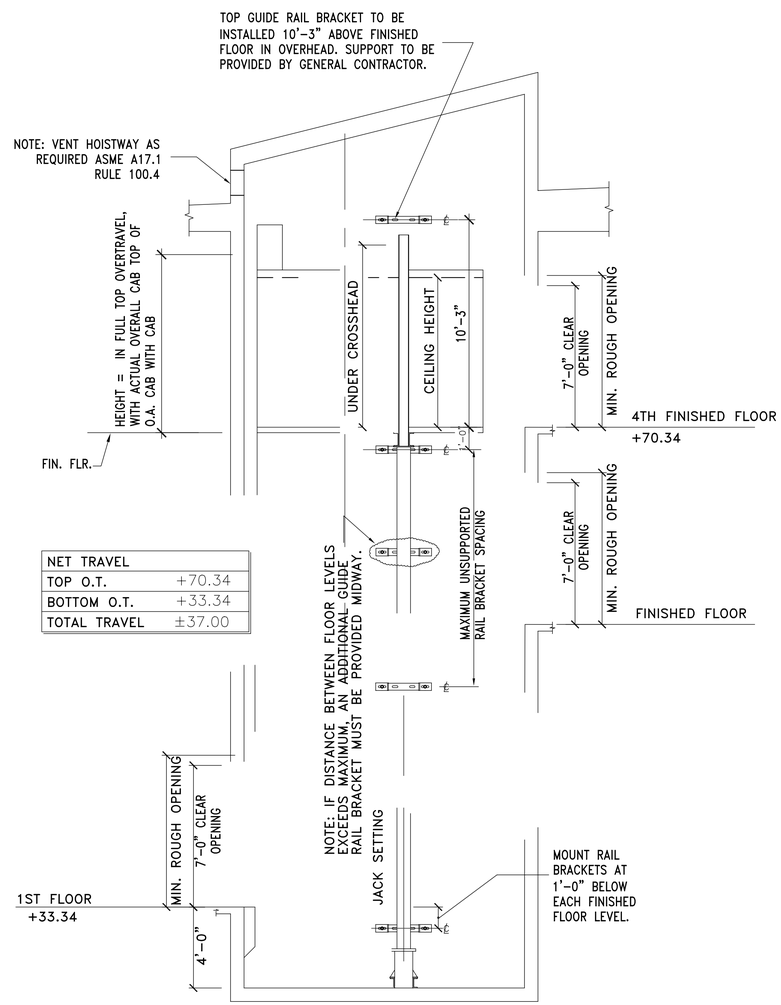


| NET TRAVEL | |
|---|---|
| TOP O.T. | +70.34 |
| BOTTOM O.T. | +33.34 |
| TOTAL TRAVEL | ±37.00 |

12 — SECTION VIEW
N.T.S.

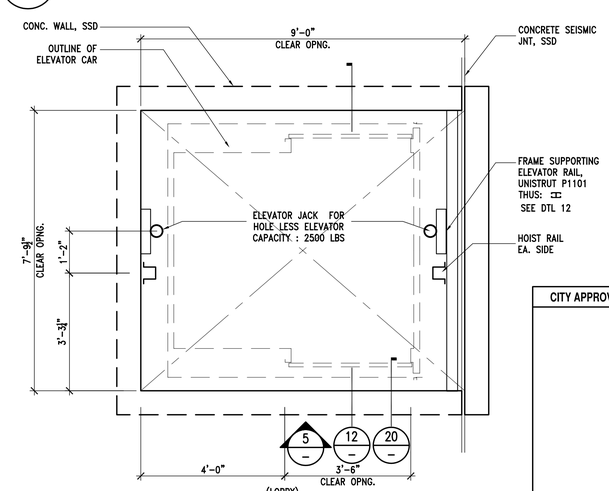


4 — PLAN – PIT
1/2"=1'-0"


THEOPHANOUS
STRUCTURAL ENGINEERS
BUILDINGS, BRIDGES AND RELATED STRUCTURES
ANALYSIS * DESIGN * PLAN CHECKING
75 Silverwood Drive, Lafayette, CA 94549
Tel: (925) 284-2822 Fax: (925) 284-9745
E-mail: ntheophanous@ntheo.com



THE INFORMATION, DATA, DRAWINGS, SPECIFICATIONS AND REPORTS ILLUSTRATED BY THIS DOCUMENT ARE INTENDED FOR THE USE OF THE CLIENT FOR THE SPECIFIC PROJECT ENGINEERED BY THEOPHANOUS STRUCTURAL ENGINEERS. THEY ARE NOT TO BE USED FOR ANY OTHER PROJECT OR ADDITIONS TO THIS PROJECT WITHOUT THE WRITTEN CONSENT OF THEOPHANOUS STRUCTURAL ENGINEERS.


REGISTERED PROFESSIONAL ENGINEER
Nicholas C. Theophanous
No. S003067
Exp. 09-30-09
STRUCTURAL
STATE OF CALIFORNIA
ENGINEER'S STAMP

CLIENT:
THEOPHANOUS FAMILY
75 SILVERWOOD DR LAFAYETTE, CA 94549
TEL:(925)284-2822 Fax:(925)284-9745

PROJECT TITLE:
FRUITVALE COMMONS
1242 35th Ave Oakland, CA 94601

SHEET TITLE:
ELEVATOR - PLAN, SECTION & DETAILS

REVISIONS

CITY APPROVAL STAMP

| | |
|---|---|
| JOB NUMBER | J2002.060 |
| DRAWN BY: TD | CHECKED BY: NCT |
| SCALE (U.O.N.) | AS SHOWN |
| DATE | 06/22/07 |
| SHEET NUMBER | A6.7 |